TRU-MERIT *ECONOMY* ARMATURE LATHE

A PRACTICAL, ECONOMICALLY PRICED TOOL, DESIGNED BY AN EXPERIENCED AUTOMOTIVE SERVICE TOOL ENGINEER TO GIVE LONG AND SATISFACTORY SERVICE IN RECONDITIONING GENERATOR AND STARTER COMMUTATORS.

TRU-MERIT ADVANTAGES

• Three point bearing of lathe bed avoids misalignment. Collets fit any popular armature shaft and give a full bearing surface for longer wear. • Take-up adjustment provided for wear. • No chucks to fill up with dirt and grime and resist turning by oily hands. • Undercutting done without aid of motor or switching belts. • One set-up permits completion of entire job.

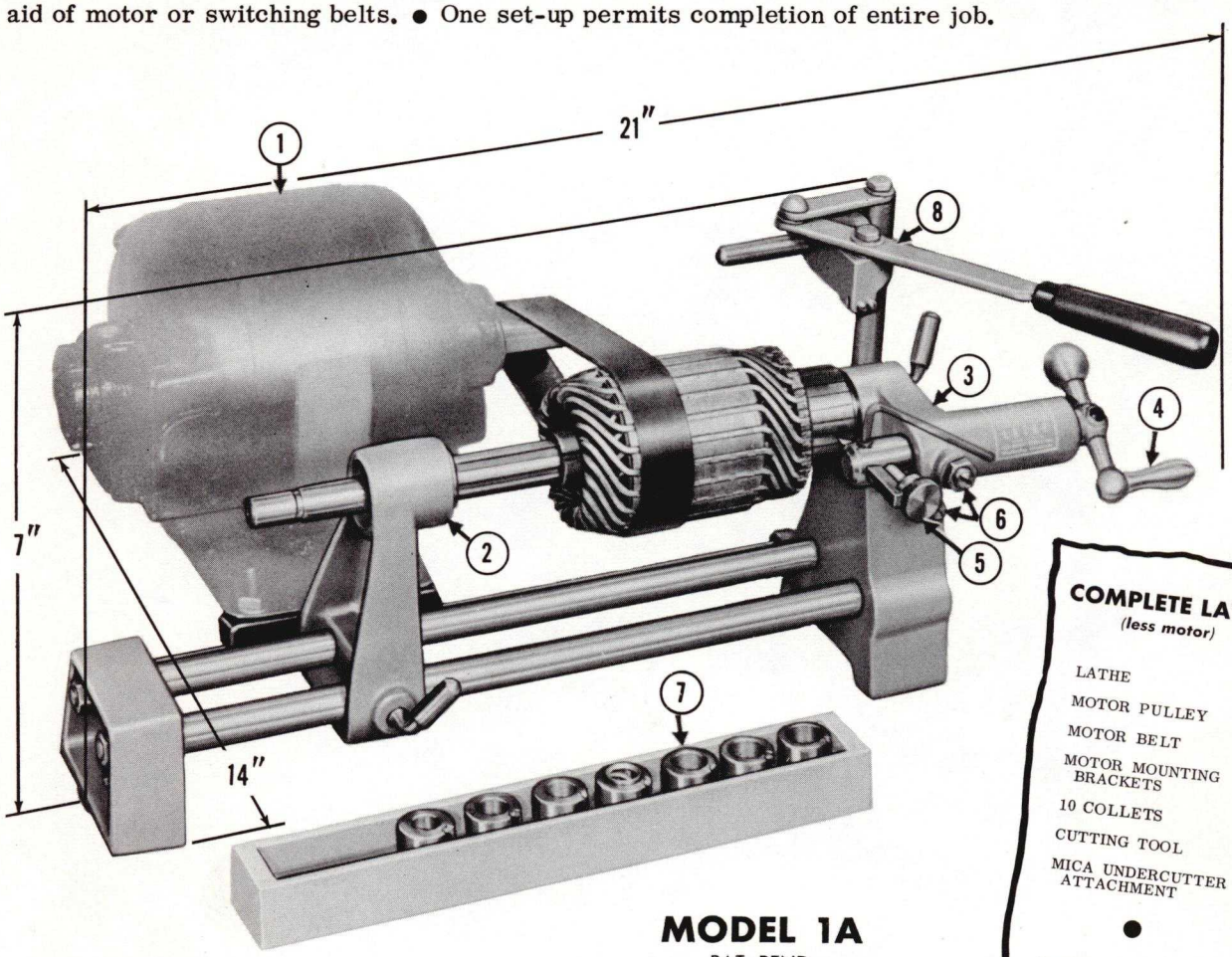

MODEL 1A
PAT. PEND.

COMPLETE LATHE
(less motor)

LATHE
MOTOR PULLEY
MOTOR BELT
MOTOR MOUNTING BRACKETS
10 COLLETS
CUTTING TOOL
MICA UNDERCUTTER ATTACHMENT

•

Packed in sturdy carton.

$57.50

(with motor)
$79.00

FEATURES

1. Uses any fractional H. P. motor
2. Tailstock adjustable to various length armatures
3. Solid headstock
4. Ball-crank -- feeds tool holder
5. Tool holder feed screw - adjusts for cut depth
6. Take-up -- for tool holder
7. Collets - to fit any popular size shafts Including Ford Bearing CS-3386
8. Mica undercutter attachment

SPECIFICATIONS

MODEL NO	1A
LENGTH	21"
WIDTH (with motor)	14"
WIDTH (without motor)	$6\frac{1}{2}$"
SWING OVER BED	6"
COLLET SIZES FROM 1/2" TO 43/64"	
SPECIAL COLLETS 1/4" TO 7/8"	
SHIPPING WEIGHT (without motor)	19 lbs
SHIPPING WEIGHT (with motor)	37 lbs

TRU-MERIT TOOLS, Inc.

BOX 35 . . . WAUKESHA, WISCONSIN

TRU-MERIT ECONOMY ARMATURE LATHE

DEALER PRICE LIST

Effective May 1, 1959
F. O. B. Waukesha, Wis., U.S.A.

Subject to change
Terms 2% 10---Net 30

STOCK NO.	SHIPPING WEIGHT	DESCRIPTION	DEALER NET
Model A	19 lbs	Tru-Merit Economy Commutator Lathe complete (less Motor) Standard Equipment Includes: Lathe Motor Pulley-Motor Belt-Belt tension Bracket 9 Collets-Cutting Tool-Mica Undercutter, 2 extra blades .	57.50
	37 lbs	Economy Commutator Lathe Complete With Motor.	79.00
A 100	18 lbs	Motor ¼ HP. -1725 R.P.M. -115 Volt 60 Cycle S.P. With Cord & Switch	21.50
A 101	6 lbs	Headstock	8.00
A 102	4 lbs	Tailstock	5.00
A 103		Tailstock lock screw	.50
A 104	4 lbs	End Bracket	2.75
A 105	3 lbs	Bed Rails (2). . . . . .Ea	2.25
A 106		Bed Rail Nuts (4) . . . . . .Ea	.10
A 107	3 lbs	Tool-Holder	5.00
A 108		Toolholder Take-up screw	.10
A 109		Tool-holder Leadscrew	3.50
A 110		Tool-Holder Leadscrew Fiber Washers (2). . . . . .Ea	.05
A 111		Tool-holder Gib Key.	.50
A 112		Gib key screw and lock nut	1.75
A 113		Leadscrew Housing	3.00
A 114		Ball Crank.	1.50
A 115		Cutting Tool (Standard)	2.00
A 116		Cutting Tool (Carbide) (Not standard equipment).	4.25
A 117		Cutting Tool Feedscrew.	3.00
A 120		Motor Pulley ½" Shaft	1.75
A 121		Drive Belt 17".	1.50
A 122		Drive Belt 19" (Not standard equipment)	2.00
A 123		Motor Slide Rod	.75
A 124		Motor Mounting Bracket.	.75
A 125		Belt Tension Bracket	1.00
A 126		Belt Tension Bracket Post	.60
A 130		Undercutter Operating Lever & Link (assembly).	2.50
A 131		Undercutter Operating Lever Handle (wood)	.25
A 132		Undercutter Operating Lever & Link screws (3) . . . . .Ea	.20
A 133		Undercutter Post & Slide Bar (assembly).	2.25
A 134	2 lbs	Undercutter Cutting Blade Head.	3.50
A 135		Undercutter Blade.	.35
A 136		Undercutter Blade Clamping screws (2) . . . . . .Ea	.20
A 137		Undercutter Post Lock screw.	.50
A 140		Collets-Standard Equipment (set of 10) Sizes: 2-.500-2-.562 1-Ford Bearing CS-3386 1-.636-2-.625-2-.669	6.75
A 141		Collets-Standard Equipment (Individually)	1.10
A 142		Collets furnished for all small motor shafts or any special size shafts (Not standard equipment) . . . . . .Ea.	2.00

TRU-MERIT TOOLS, Inc.

BOX 35 . . . WAUKESHA, WISCONSIN